JACKRABBIT SERIES

RETRACTABLE HARD TRUCK BED COVERS

JACK RABBIT® JACK RABBIT® FULL METAL

NISSAN FRONTIER XSB
INSTALLATION INSTRUCTIONS

TABLE OF CONTENTS

Tools Required for Assembly 2
Before You Start 2
Drain Hole Locations 2
Packaging Contents 2
STEP 1: Positioning Canister 3
STEP 2: Installing Rails 3
STEP 3: Repositioning Canister 3
STEP 4: Install Tailgate end of Pull Strap..... 4
STEP 5: Installing Clamps 4
STEP 6: Lubricating & Placing Sweep Seals ... 5
STEP 7: Installing Drain Tubes..... 5
STEP 8: Install Top Cover & Velcro 5
Operating Instructions 6
Helpful Maintenance Hints 6
Warranty Statement..... 7

PACE EDWARDS

#1 RETRACTABLE TRUCK BED COVER

(800) 338-3697

www.paceedwards.com

Pace Edwards Company
2400 Commercial Blvd.
Centralia WA 98531

Part #: JR-SERIES Frontier XSB INSTALL-0611
CANISTER PART # TR2057

(SP10)

TOOLS REQUIRED FOR ASSEMBLY:

1/2” wrench or socket
#2 Phillips screwdriver
Wire Cutters
Tape measure

Note: There should be no drilling into the truck body needed on most standard or full-size trucks .

BEFORE YOU START:

Read the instructions carefully before you start. These instructions are written for one-person installation. We have noted where briefly having an extra person’s assistance can make installation easier. If you have questions regarding the installation please call our Technical Support Line at (800) 338-3697.

DRAIN HOLE LOCATIONS:

The JackRabbit is designed to carry rainwater from the cover into the canister and then out through the drains. Most truck models have standard OE drain holes or plastic/rubber access ports in the front of the truck bed. Check to make sure your truck has the OE drain holes so that drilling into the sheet metal is not required. If drilling is necessary, be sure to check the underside of the truck bed for the best location. The holes should be located near the side and as far forward as possible. Use a drill bit suitable for sheet metal (such as a taper drill or step drill). Drill drain tube clearance holes at 3/4” (19mm). This will need to be done before installing the cover.

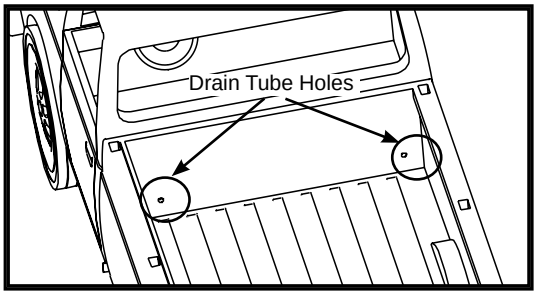

PACKAGING CONTENTS:

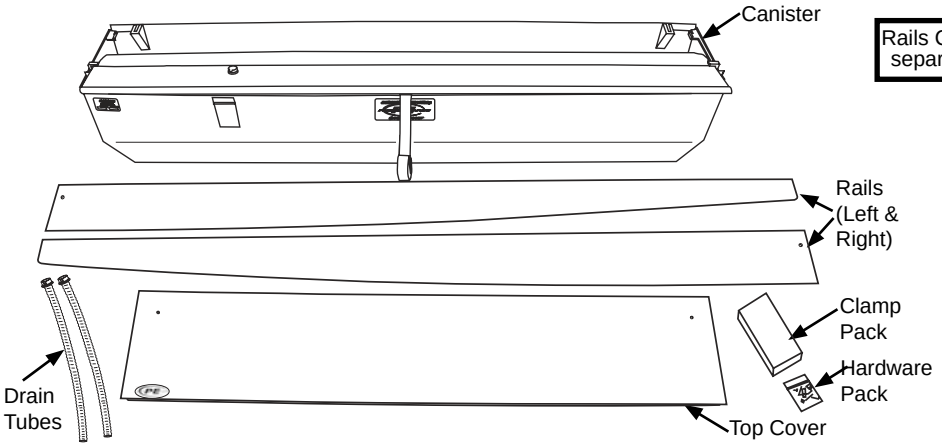

Rails Come in a separate Box.

CAUTION!

DO NOT USE A KNIFE TO OPEN THE RAIL BOX.

OPEN THE RAIL BOX ALONG THE LENGTH OF THE BOX AND LIFT RAILS OUT TO AVOID SCRATCHING THE SURFACE OF THE RAILS ON THE PACKAGE STAPLES.

INSTALL TIP!

IF YOU HAVE ANOTHER PERSON TO HELP STEADY THE CANISTER, IT MAY BE EASIER TO INSTALL THE RAILS (DESCRIBED IN STEP 3) BEFORE POSITIONING THE CANISTER IN THE TRUCK BED.

INSTALL TIP!

STEP 1: POSITIONING CANISTER

Remove the top cover from the canister box and set it aside for later installation.

Perform a quick inventory to insure all parts are there. Be sure to check inside the small cardboard box for parts.

You will need one or two support pieces (We suggest using the top of the box the Jackrabbit was shipped in.) to set in the truck bed approximately one foot from the cab that will go under the canister, raising the top of the canister above the bed rails by 2-3 inches.

Remove the Canister from the box and set it on the support(s) in the truck bed.

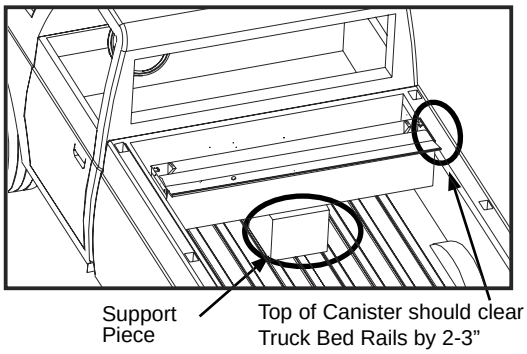

STEP 2: INSTALLING RAILS

HARDWARE USED:

1/4-20 x 3/4” BOLT x 2

1/4” LOCK WASHER x 2

1/4” FLAT WASHER x 2

Open the rail box along the length of the box; lift rails out to avoid scratching the rail surface on the package staples.

REMOVE PROTECTIVE PAPER ON UNDERSIDE OF RAILS. THIS IS FOR PACKAGING PURPOSES ONLY.

Install the rails by sliding them through the attached blanket guides on the canister, threading the blanket in the rails, and sliding the rails into the rail grips that are attached on the inside of the canister.

Then slide the rails forward, towards the truck cab making sure that both of the rail grips are engaged. *(Figure 3a)*

Secure the rail by installing the hardware (Bolt, Lock Washer, Flat Washer) through the Rail Grip Attachment and predrilled hole in the rail.

Complete for both left and right rails.

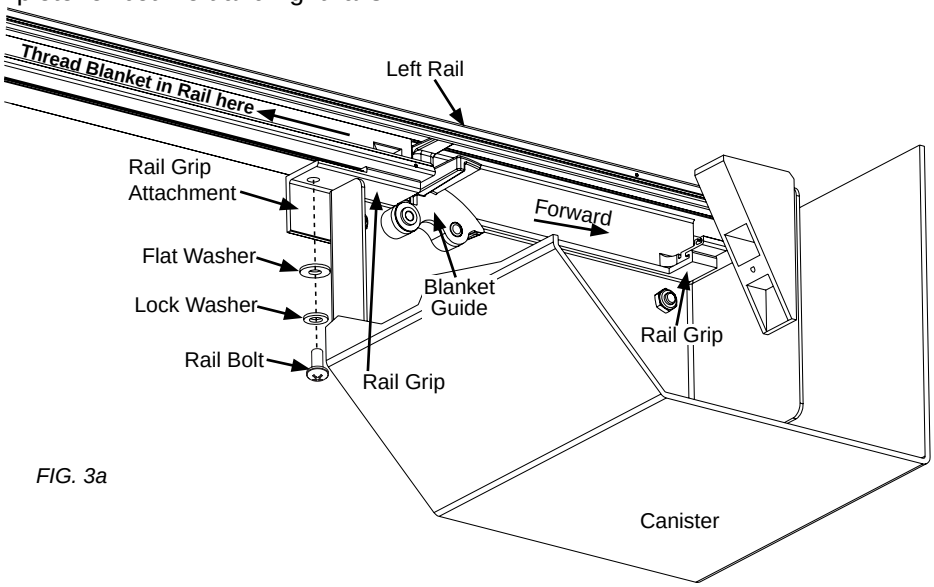

FIG. 3a

STEP 3: REPOSITIONING CANISTER

Remove the support(s) under the canister so that the canister and rails rest firmly on the sides of the truck bed. With the tailgate closed position the rails so they are snug up against the tailgate.

STEP 4: INSTALL TAILGATE END OF PULL STRAP

HARDWARE USED:

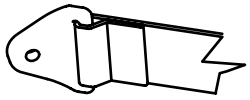

PULL STRAP x 1
(TAILGATE END)

Install the tailgate end of the pull strap to the underside of the drivers side rail using the #8-32 x 3/4 machine screw located at the tailgate end on the underside of the rail.

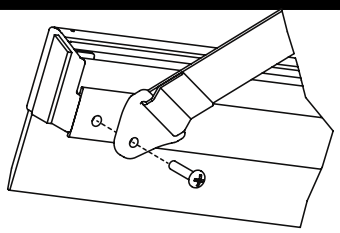

STEP 5: INSTALLING CLAMPS

HARDWARE USED:

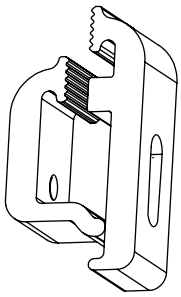

OUTER & INNER RAIL CLAMPS x 4

1/4" FLAT WASHER x 4

1/4" LOCK WASHER x 4

RAIL CLAMP BOLT x 4

Place the four clamps (*Figure 6*) over the rail brackets located on the underside of the rails and snug up but do not tighten yet.

Rotate the outer clamp bracket clockwise to tighten the rail against the truck bed rail.

With the tailgate closed, slide the rails to establish the correct spacing to the tailgate. The rails have a rubber spacer on the end caps, at the tailgate end, to establish the correct spacing (1/16") and to prevent the tailgate from striking the side rails when closing. Press the rail tightly against the closed tailgate.

Measure the distance between the rails at the canister and tailgate. This distance should be 53-5/16" to allow your cover to operate properly. Once everything is square tighten the Rail clamps completely.

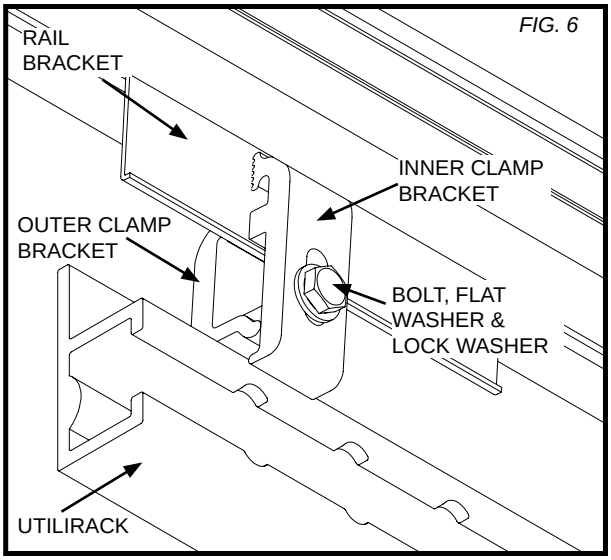

FIG. 6

DO NOT TIGHTEN OVER 120-INCH POUNDS!

STEP 6: LUBRICATING & PLACING THE SWEEP SEALS

Locate the sweep seals (rubber weather strips) on the rails. Open the provided 303 brand protectant sponge pack (find it adhered to the underside of the top cover) and wipe the underside of the sweep seal and the top of the wear strip.

Extend the cover to the tailgate. Use an Allen wrench if needed to carefully draw out the sweep seal (seal should be angled outwards toward the cover – not rolled in toward the bed rail). *(Fig. 7A)*

Proper care and placement of the sweep seal will ensure smooth operation of the cover. Alcohol, petroleum based or silicon-based cleaners such as Armor-All® should be avoided and ARE NOT recommended for our covers

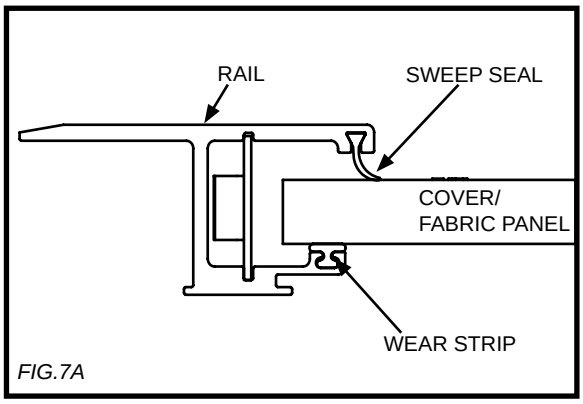

FIG.7A

STEP 7: INSTALLING DRAIN TUBES

First ensure that the washer is in place on the drain tube end being inserted into the canister (This will prevent water leakage). Test fit the drain tube to determine the length you want to trim it. Always caution on the long side. Trim the end that will be inserted through the truck bed with the wire cutters or a utility knife.

With the cover *opened*, insert the drain tube fittings into the pre-drilled holes on the underside of the canister by pushing them in place from under the canister. Drain tube should click into place.

Place the other end of the drain tube through the plastic/ rubber access port or through the pre-drilled holes in the floor or the front wall of the truck bed.

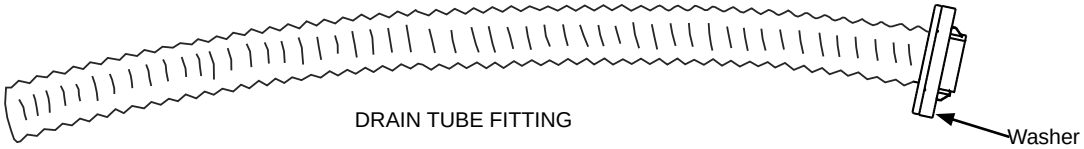

NOTE: If the OE access ports are located on the front wall of the truck bed you should ensure that the drain-tubes are inserted and directed down so water flows out of the truck.

STEP 8: ATTACHING TOP COVER & VELCRO TO PULL STRAP

HARDWARE USED:

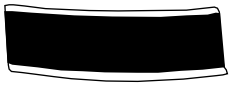

4' VELCRO STRIP

BLACK TOP COVER SCREW x 2

Place the Top Cover on the canister and install with the two black Top Cover screws into the top cover mounting blocks. (we recommend that you use a thread locking adhesive like Loctite® on the screws)

Retract the cover to the fully open position.

Attach the 4" Velcro strip onto the Velcro strip already attached to the pull strap.

Pull the pull strap over to the driver's side rail and remove the tape from the 4" Velcro strip.

Then apply the Velcro strip onto the underside of the rail at your desired position.

This will hold the pull strap off of the floor and out of the way when cargo is being stored in the truck bed.

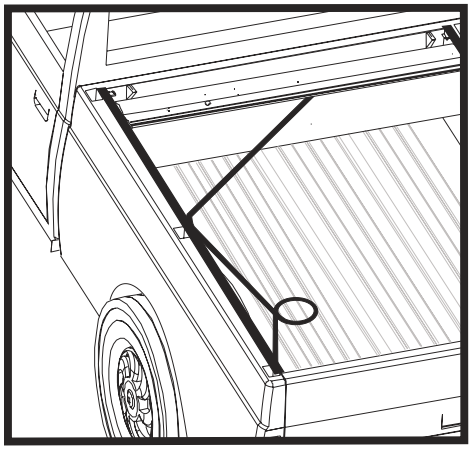

You have now completed the installation of your JackRabbit hard tonneau cover. If you have any questions please do not hesitate to call us at: (800) 338-3697 and ask for our technical service department.

OPERATING INSTRUCTIONS

1. To open the cover, turn the actuator knob clockwise 90° until it clicks in the open position. This retracts the latches into the handle and the cover is free to roll open into the canister. A tug on the pull strap will release the latch and allow the cover to lock into the rails.
2. To latch the cover in one of the mid-range positions, pull it back just beyond the position desired and allow the cover to retract until it latches into place. Latching positions are located every 12 inches along the rails. The clicking sound is the spring-loaded latches mounted inside the handle. The latches are designed to bypass the latching positions as the cover is being closed and to stop the cover as it is being retracted.
3. To close the cover, pull on the strap to draw it back toward the tailgate. When it is within easy reach, grasp the handle by the hand grip and pull the cover to the latching position against the tailgate.
4. To use the key lock, position the cover on the truck bed with the actuator knob in the closed position and turn the key.

HELPFUL MAINTENANCE HINTS

To assure quiet, smooth operation, apply a small amount of Pace Edwards' UV Protectant (or 303 brand lubricant) to a rag and wipe the underside of the sweep seal and the top of the wear strip. Re-apply if the cover begins squeaking or sticking during use. *(Fig. 1)*

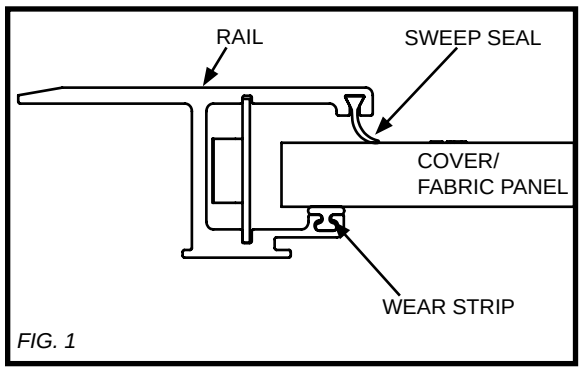

FIG. 1

Proper care and placement of the sweep seal will ensure smooth operation of the cover. Alcohol, petroleum based or silicon-based cleaners such as Armor-All® should be avoided and ARE NOT recommended for our covers.

Periodically remove the Top Cover and clean out the canister.

It is important to open and close the cover regularly; the spring that operates the cover is self-lubricated and regular use assures that it stays in proper working condition.

Drain tubes may become clogged overtime and should be removed and cleaned. To remove the drain tubes you must; Remove the Top Cover, close the cover to the tailgate, reach in the canister and depress the plastic retaining tabs on the drain tube fittings and push the drain tube out of the hole in the bottom of the canister. *(Fig. 2)*

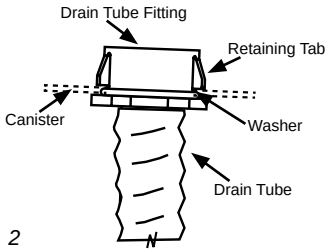

FIG. 2

To help keep the JackRabbit tonneau cover looking it's best, we recommend washing it the same as caring for your truck finish. However you should not wax your cover. Using a citrus-based vinyl cleaner and protectant such as Pace Edwards Brand or the 303 brand will keep your cover looking like new. Alcohol, petroleum based or silicon-based cleaners such as Armor-All should be avoided and ARE NOT recommended for our covers.

CONGRATULATIONS!

On your purchase of a Pace Edwards Retractable Truck Bed Cover. We are confident that you will get many years of trouble free service from this accessory to your truck. Please take a moment to fill out the warranty registration form to activate warranty coverage of your truck bed cover.

PACE EDWARDS PRODUCT WARRANTY

PACE EDWARDS (hereinafter referred to as the MFG.) warrants each new Pace Edwards Bedlocker®, JackRabbit®, Full-Metal-JackRabbit™, and Roll-Top-Cover® retractable truck bed cover to the original owner as follows:

FOR A PERIOD OF THREE (3) YEARS FROM THE DATE THE UNIT IS DELIVERED TO THE FIRST PURCHASER OR PLACED INTO SERVICE AS A DEMONSTRATOR OR COMPANY UNIT:

- Delamination of the ArmorTek deck
- Separation of the Bedlocker/Full Metal deck panels
- Failure of the Continuous Tension Spring
- Failure of the Bedlocker drive system
- All lock assemblies
- All hardware and components

ITEMS NOT COVERED UNDER WARRANTY FOR ANY PERIOD OF TIME:

- Rips, tears, or discoloration of the ArmorTek deck material
- Seals and gaskets
- Water intrusion from any source
- Dealer and/or purchaser installed parts and accessories

CERTAIN CONDITIONS WILL VOID ALL WARRANTY.
These conditions include:

- Use for any purpose other than normal private use including rental and promotion
- Altering the retractable truck bed cover in any manner without written approval of the MFG
- Misuse, negligence or accident
- Installation of any part or accessory without written approval from the MFG
- Failure to register this warranty with the MFG within fourteen (14) days from date of delivery

CONDITIONS AND LIMITATIONS
This warranty is subject to certain conditions and limitations including, but not limited to, the following:

- Any part of a Pace Edwards retractable truck bed cover that is found to be defective under the terms of this warranty will be repaired or replaced using either new or reconditioned parts at the discretion of the MFG.
- In determining what constitutes a failure under the terms of this warranty the decision of the MFG shall be final.
- This warranty is extended to the original purchaser only and is not transferable to subsequent purchasers.
- The MFG does not accept any responsibility in connection with the installation of any of its products by its dealers or agents.
- The MFG does not undertake responsibility to any purchaser for warranty express or implied by any of its dealers, distributors or agents beyond that which is contained herein.
- Without regard to an alleged defect of its products the MFG under any circumstances does not assume responsibility for loss of time, inconvenience, revenue, or other consequential damage including, but not limited to, expenses for telephone, food, lodging, travel, loss or damage to the vehicle the products are installed on or loss or damage to personal property of the purchaser or user of the products.
- The MFG reserves the right to make changes in the design of, improvements to, or warranty of its products without imposing any obligation upon itself to provide the same for any products theretofore manufactured.

Some jurisdictions do not allow limitations on or exclusions to warranties, therefore some of the exclusions may not apply to you. This warranty affords you specific legal rights. You may have other legal rights that may vary from jurisdiction to jurisdiction.

CLAIM PROCEDURE
If a part fails, the purchaser should return to the selling dealer to determine if the failed part is covered under the terms of this warranty. If a Warranty Claim is necessary, the dealer will contact Pace Edwards to obtain A Return Goods Authorization. If it is impractical for the purchaser to return to the selling dealer, then the purchaser may contact the Pace Edwards Technical Assistance Help Desk at 1-800-338-3697 to determine warranty eligibility. In either event, it is the responsibility of the purchaser to obtain a Return Goods Authorization prior to returning the defective part to the MFG. The defective part, along with a copy of the original Bill of Sale and the Pace Edwards issued RGA #, must be returned PREPAID to Pace Edwards Co. 2400 Commercial Blvd. Centralia, WA 98531. After determining the validity of the warranty claim, PACE EDWARDS will ship a replacement part prepaid to the customer. Labor costs to replace defective parts are the responsibility of the purchaser.

WARRANTY REGISTRATION

Please return this completed warranty registration within 14-days to:
Or go online and register your warranty at:
www.pace-edwards.com/warranty-care

Pace Edwards
Attn: Warranty Dept.
2400 Commercial Blvd.
Centralia, WA 98531

NAME: _____

ADDRESS: _____

CITY: _____ PROV./STATE: _____ PC/ZIP: _____

MODEL #: _____ SERIAL #: _____

DATE OF PURCHASE: _____ PURCHASED FROM: _____ PRICE PAID: _____

CUSTOMER SIGNATURE: _____

2400 Commercial Blvd, Centralia, WA 98531 USA
(360) 736-9991 *(main)* ◆ (360) 736-9992 *(fax)*
(800) 338-3697 *(toll-free)*
www.paceedwards.com

Thank you for choosing products by…

PACE EDWARDS

#1 RETRACTABLE TRUCK BED COVER